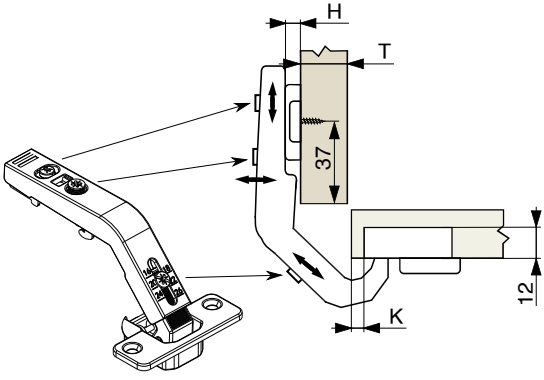

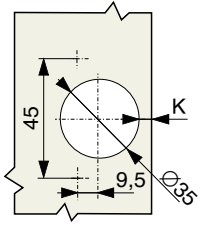

T	H
18 ≤ T < 22	H0
T < 18	H2

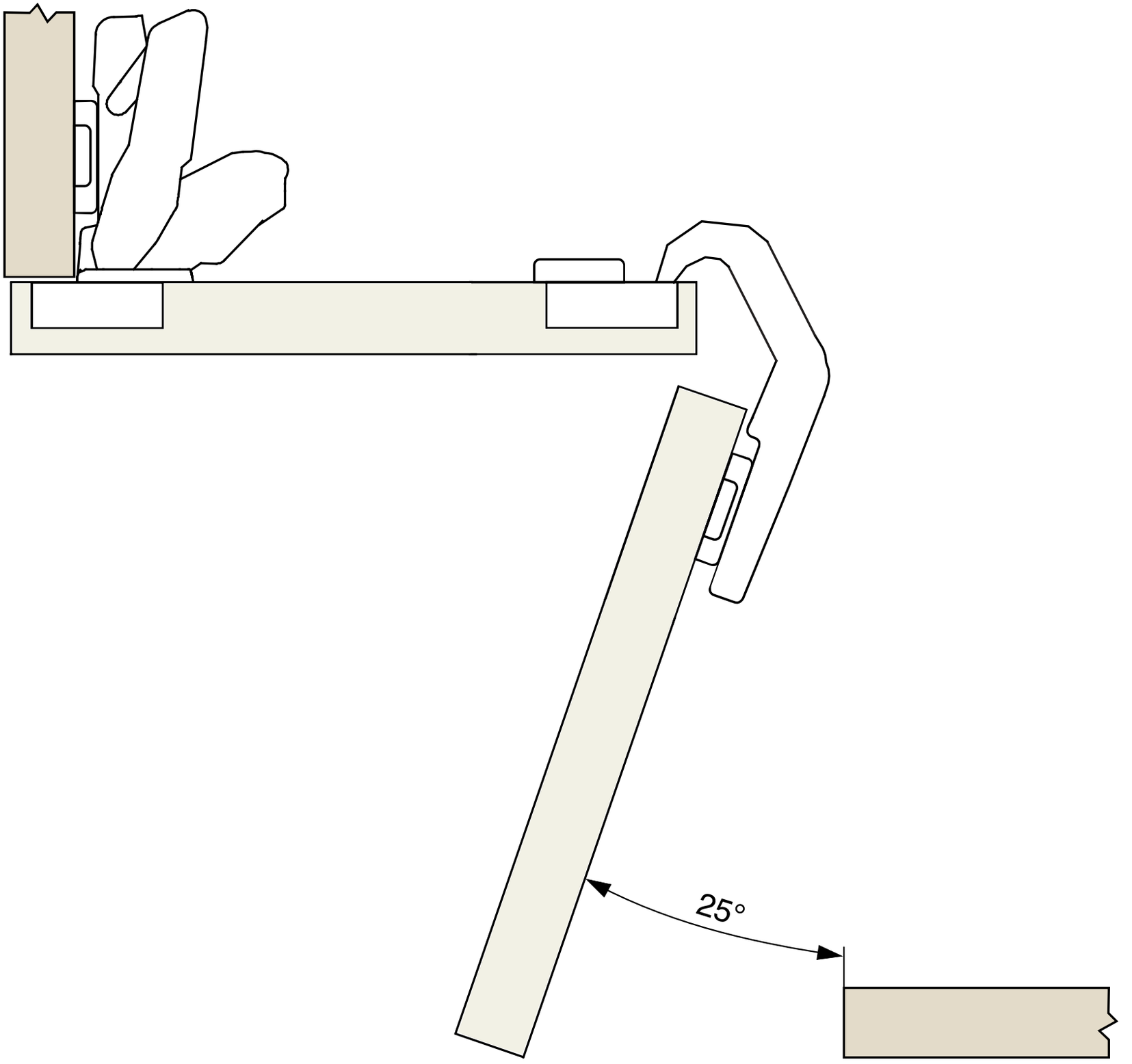
25°